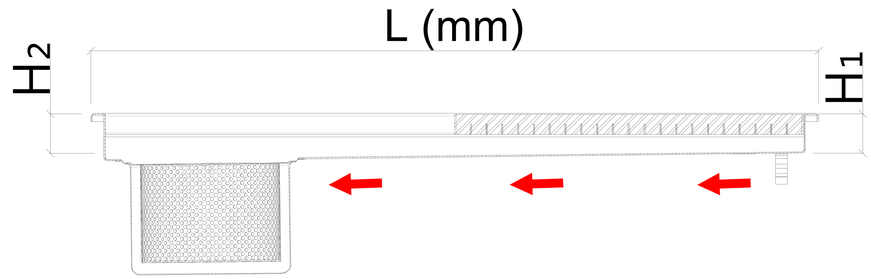

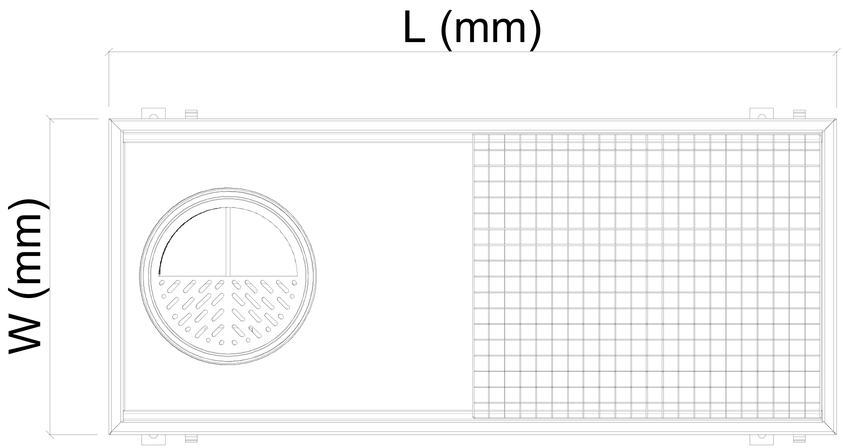

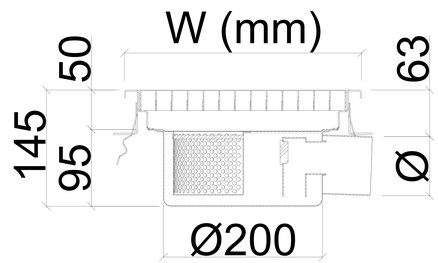

LOW TYPE

MODEL	W x L	H_1-H_2	Ø DN50	Ø DN70
KYG-49	400 x 921	40-50	Ø50	Ø75
KYG-411	400 x 1183			
KYG-413	400 x 1364			
KYG-416	400 x 1625			
KYG-418	400 x 1805			
KYG-420	400 x 2068			
KYG-422	400 x 2248			
KYG-425	400 x 2510			
Max. Flow Rate lt / min			50	50
Waterseal Height			50mm	

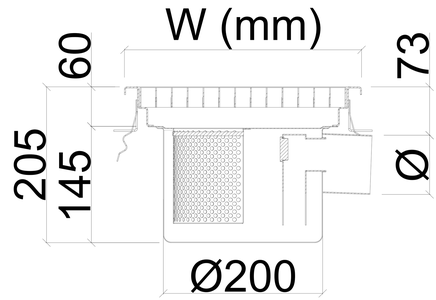

DEEP TYPE

MODEL	W x L	H_1-H_2	Ø DN50	Ø DN70	Ø DN100
KYG-49-D	400 x 921	50-60	Ø50	Ø75	Ø110
KYG-411-D	400 x 1183				
KYG-413-D	400 x 1364				
KYG-416-D	400 x 1625				
KYG-418-D	400 x 1805				
KYG-420-D	400 x 2068				
KYG-422-D	400 x 2248				
KYG-425-D	400 x 2510				
Max. Flow Rate lt / min			50	50	70
Waterseal Height			60mm		

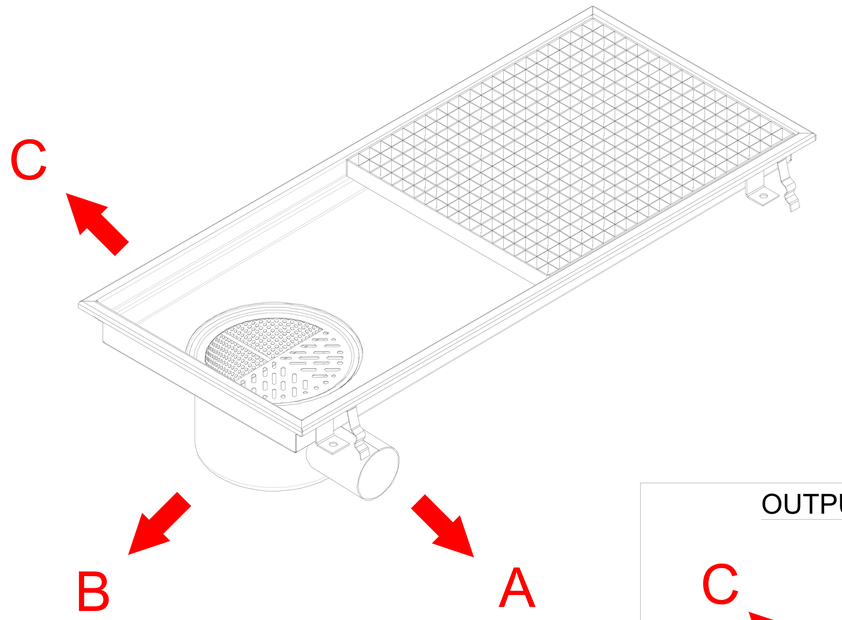

FENICROM®

OUTPUT

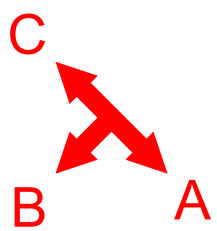

APPLICATION DRAWING

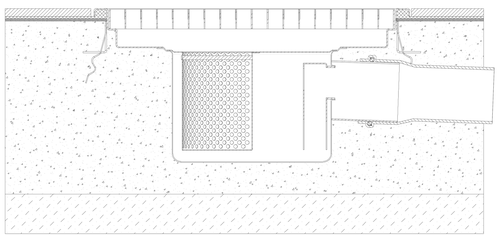
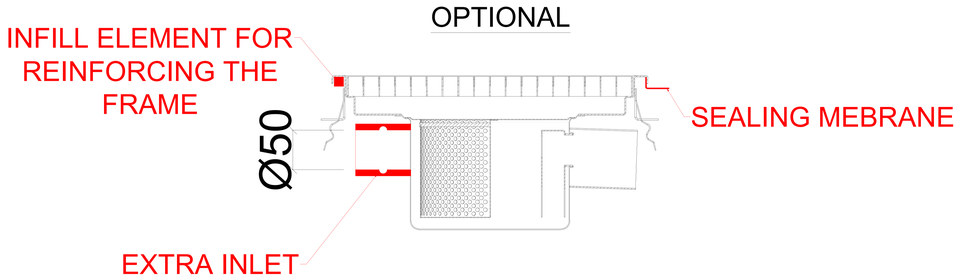
OPTIONAL