CHANNEL TYPE: END-3AG-135 BOTTOM OUTLET
END-3YG-135 SIDE OUTLET

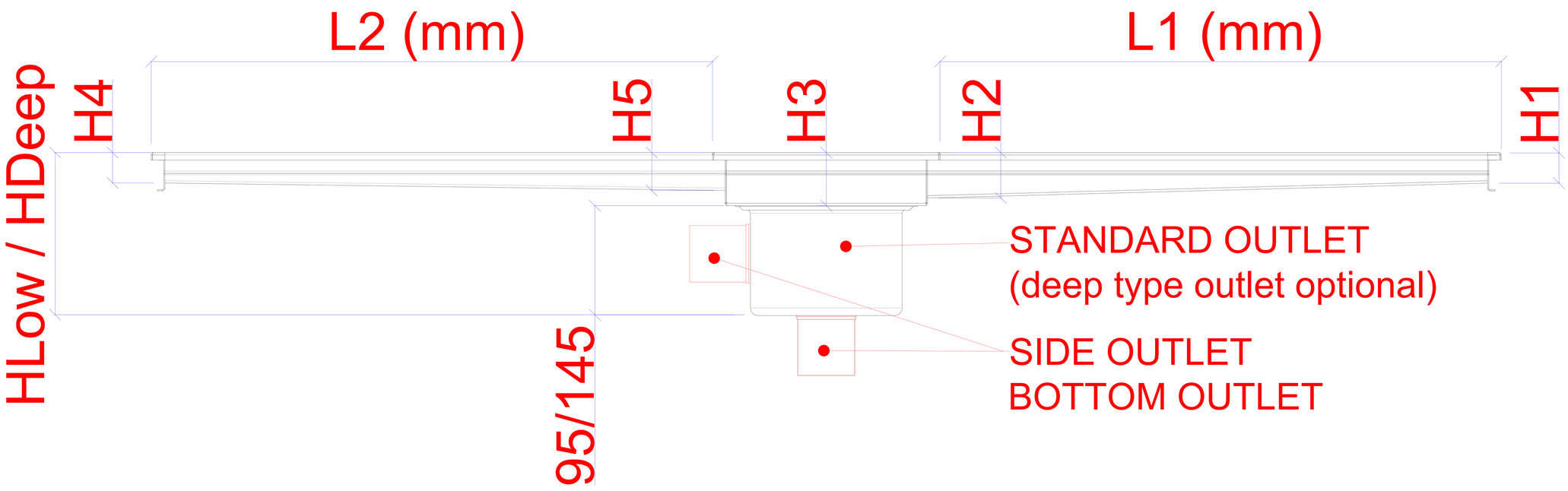

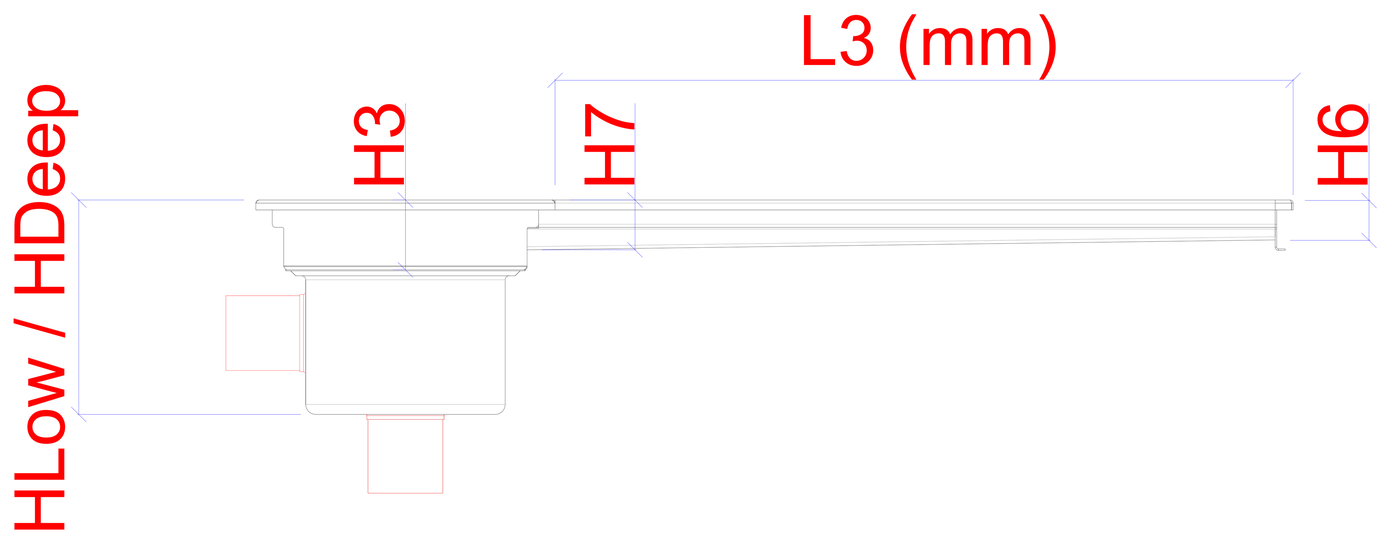

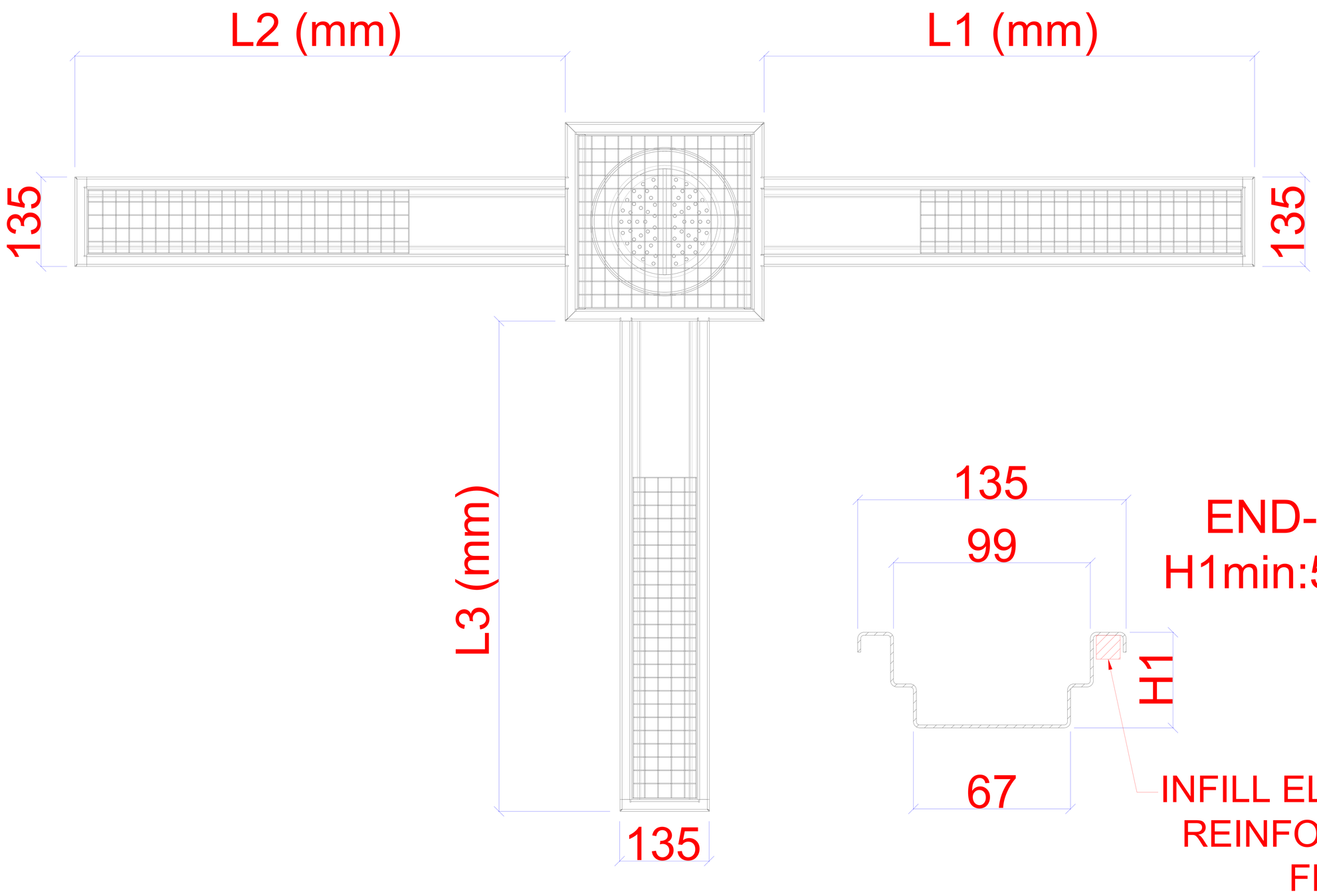

END-135
H1min:55mm

INFILL ELEMENT FOR REINFORCING THE FRAME (OPTIONAL)

FENICROM®