CHANNEL TYPE: END-3AG-150 BOTTOM OUTLET
END-3YG-150 SIDE OUTLET

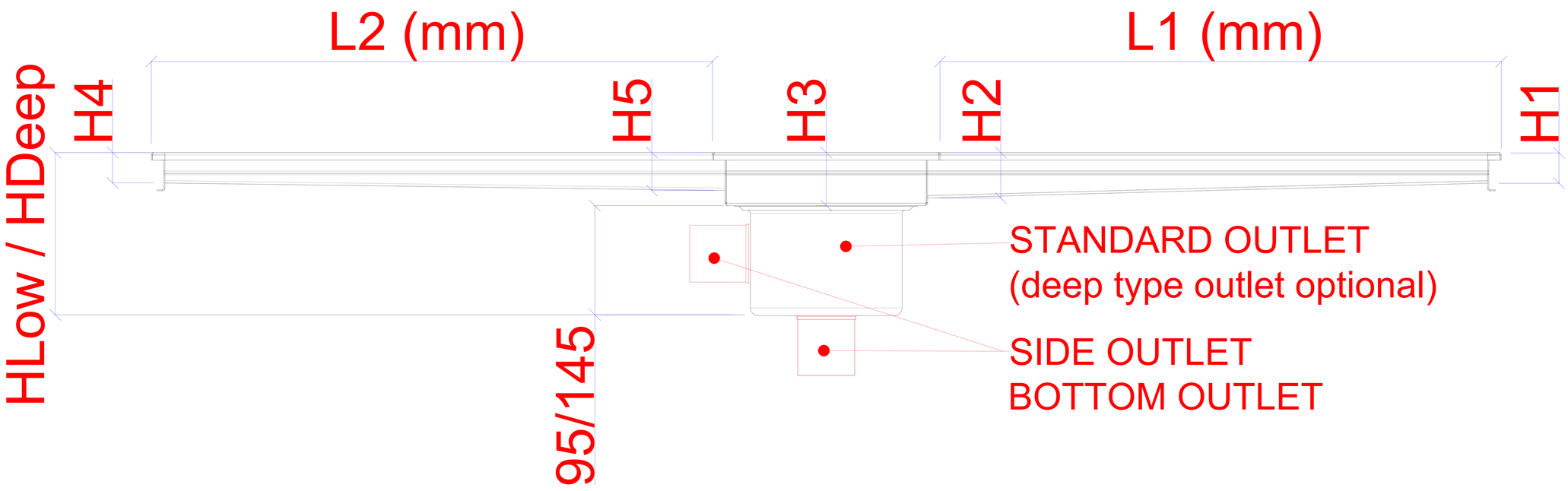

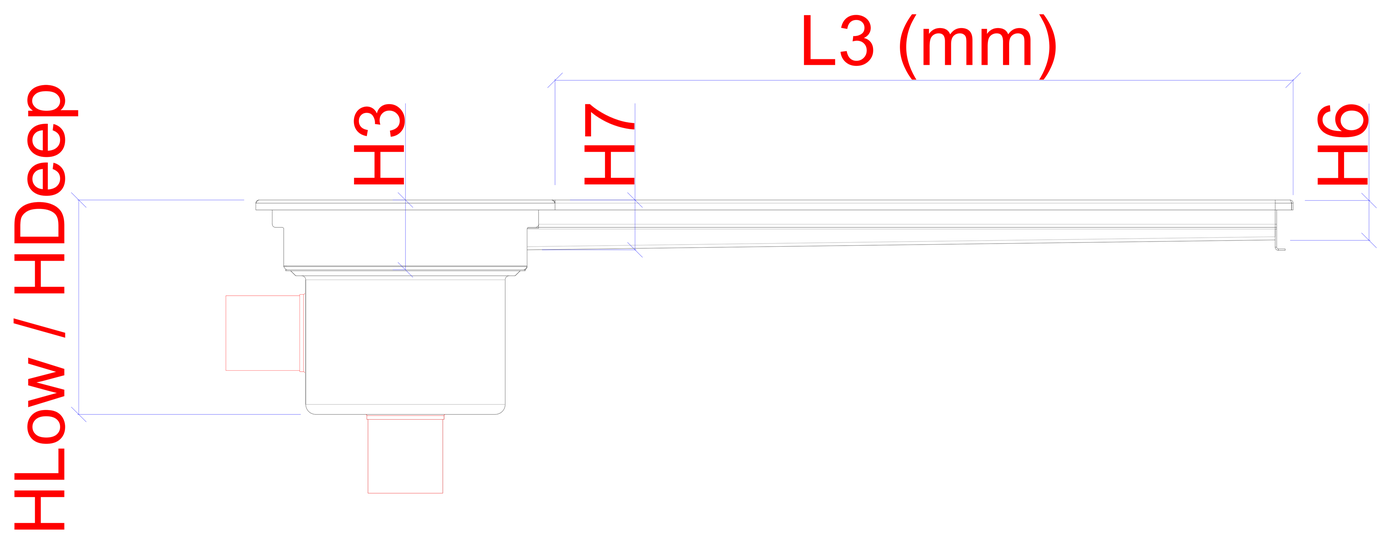

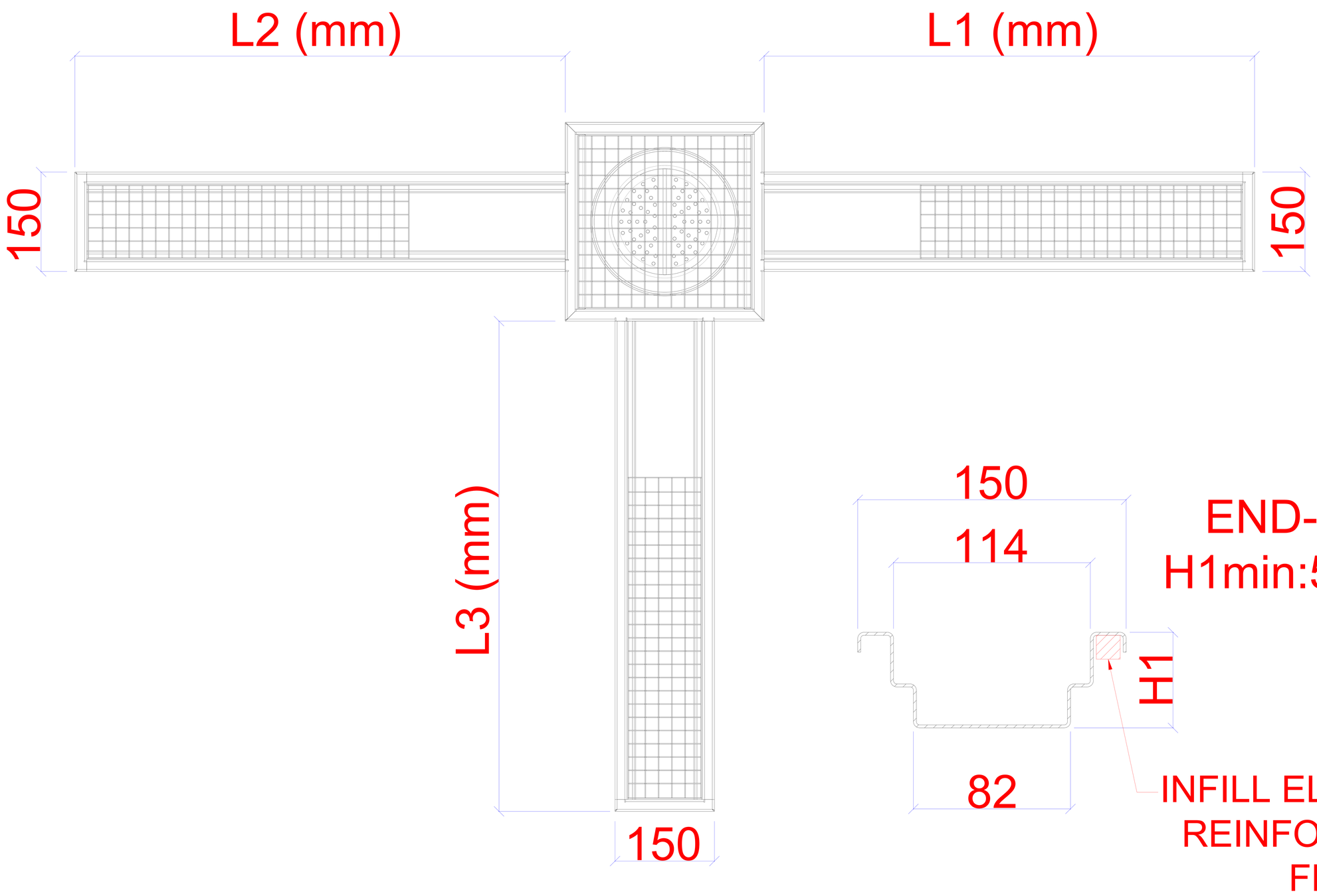

END-150
H1min:55mm

INFILL ELEMENT FOR REINFORCING THE FRAME (OPTIONAL)

FENICROM®