CHANNEL TYPE: END-3AG-200 BOTTOM OUTLET
END-3YG-200 SIDE OUTLET

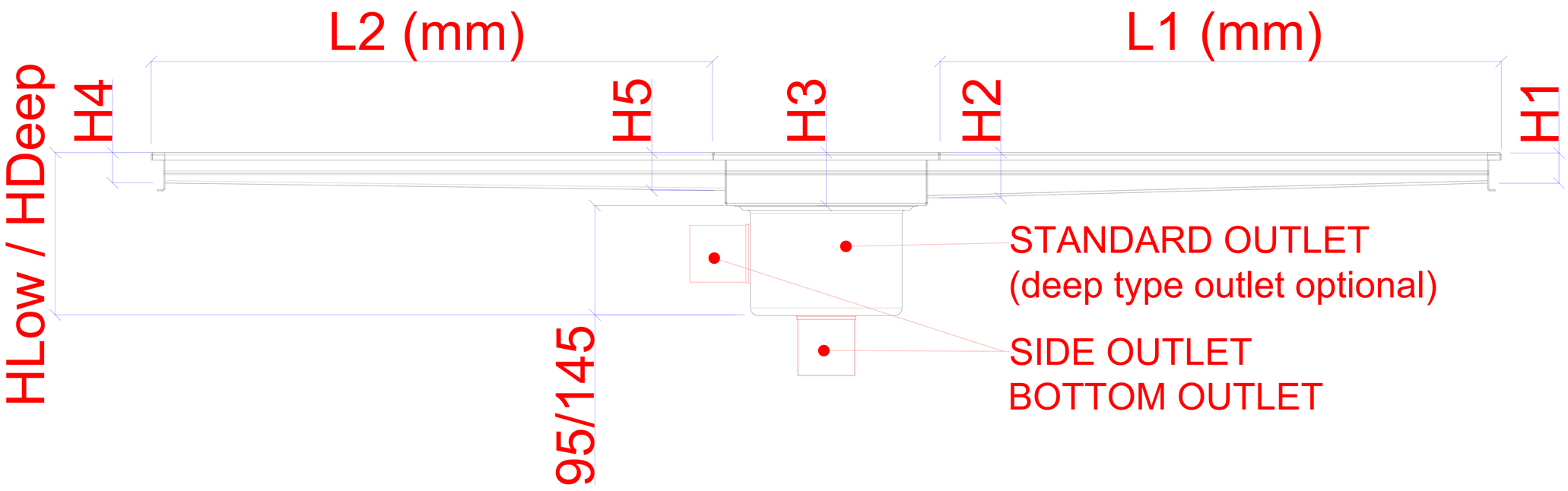

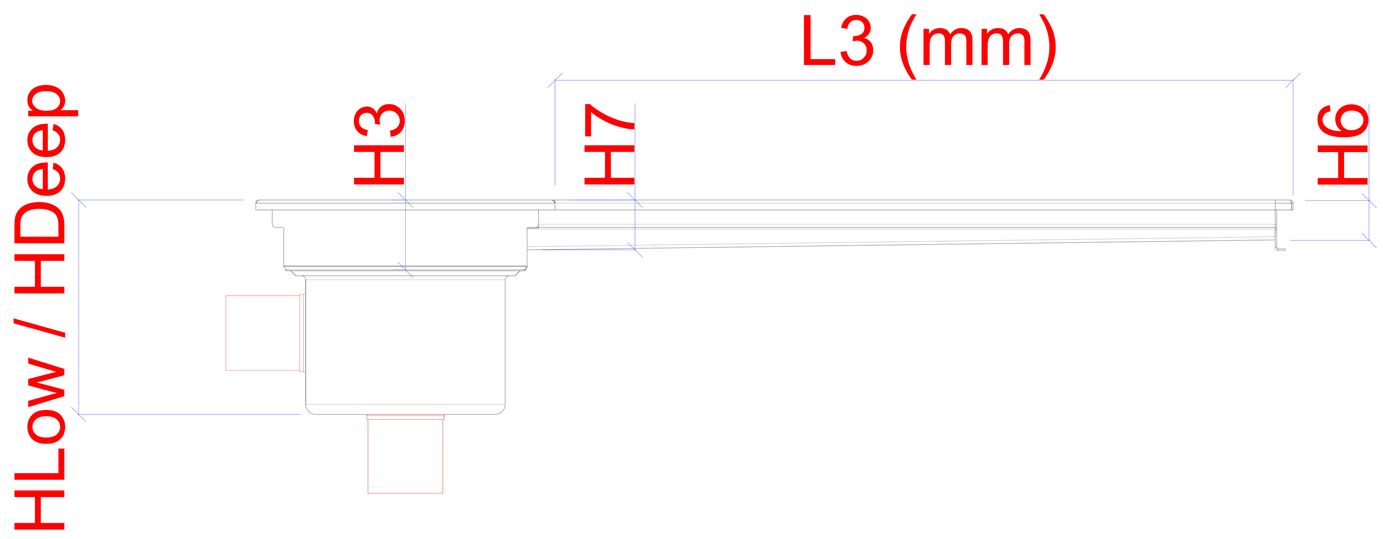

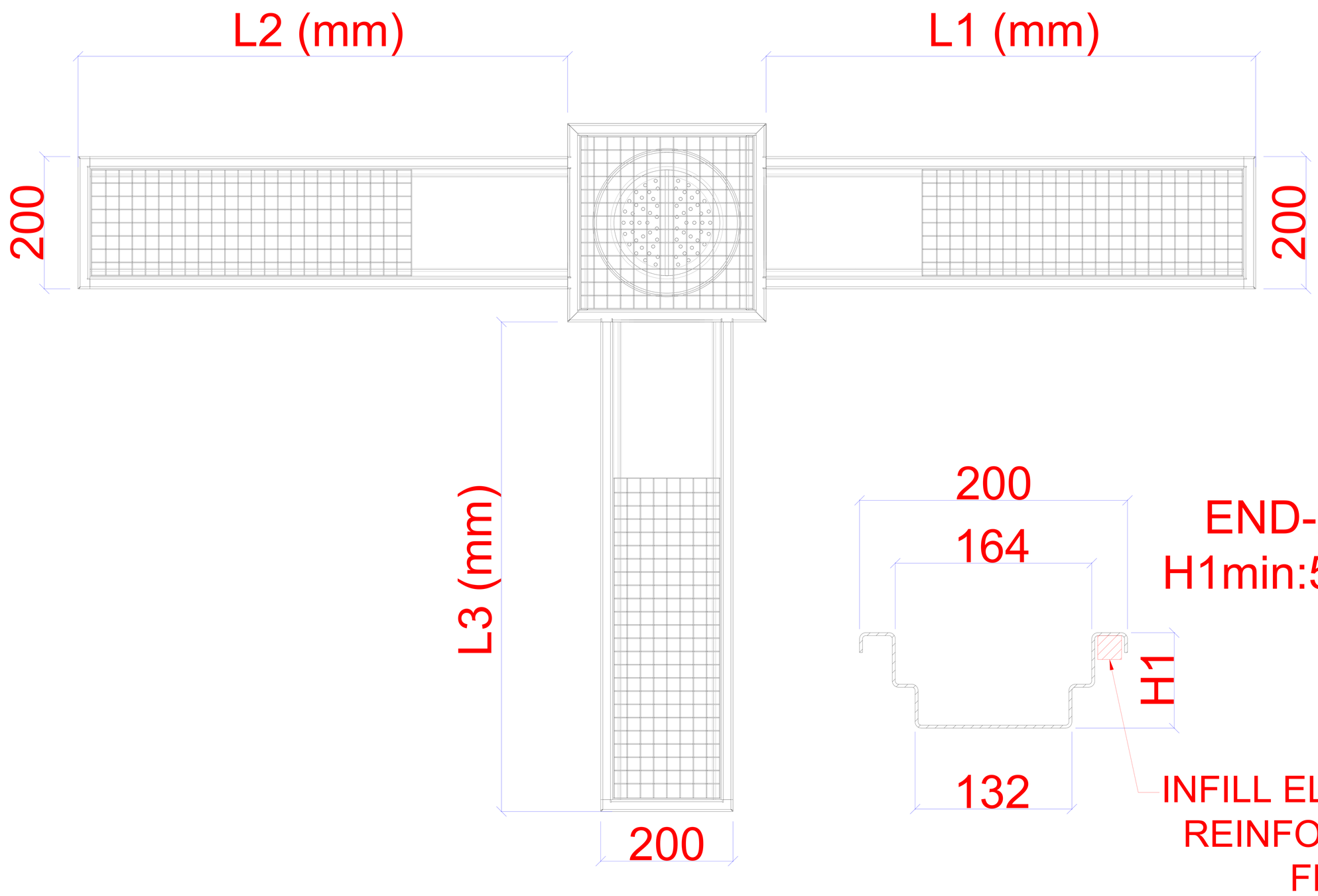

END-200
H1min:55mm

INFILL ELEMENT FOR REINFORCING THE FRAME (OPTIONAL)

FENICROM®