CHANNEL TYPE: END-3AG-250 BOTTOM OUTLET
END-3YG-250 SIDE OUTLET

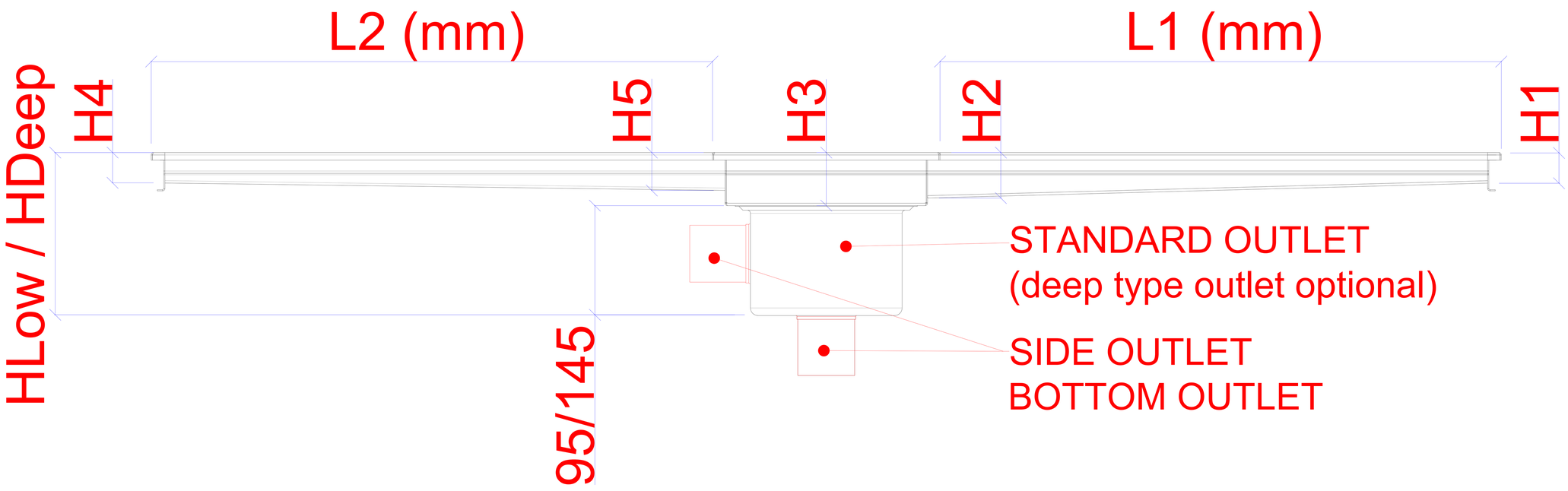

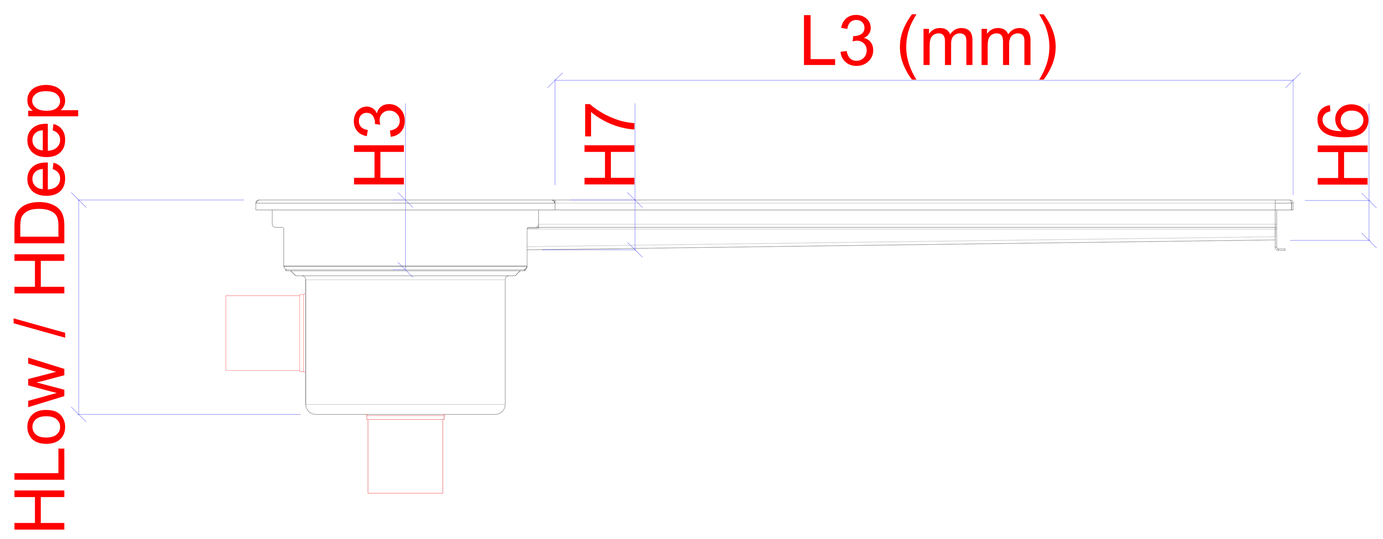

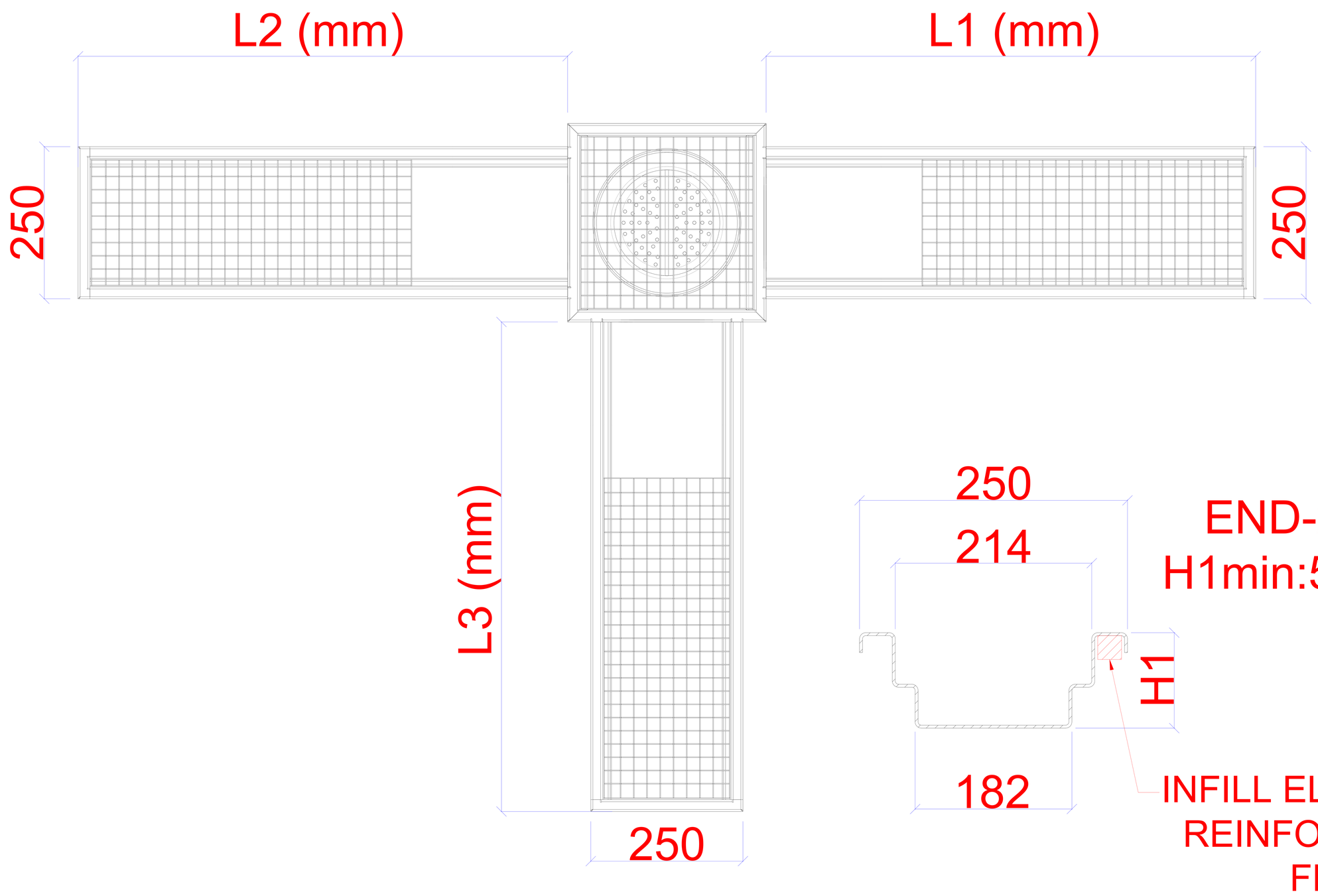

END-250
H1min:55mm

INFILL ELEMENT FOR REINFORCING THE FRAME (OPTIONAL)

FENICROM®