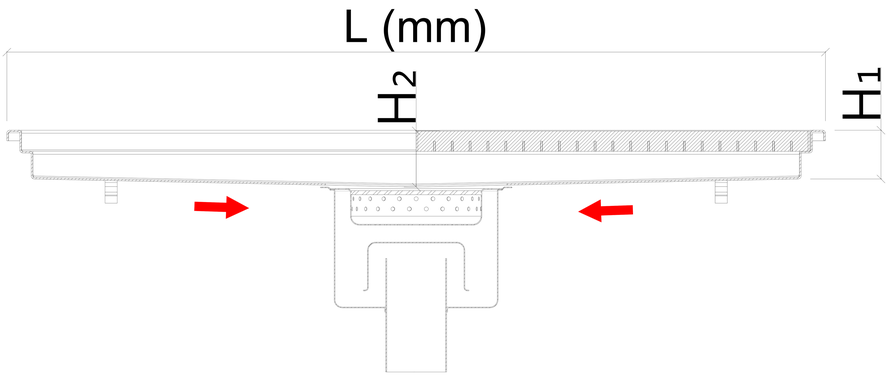

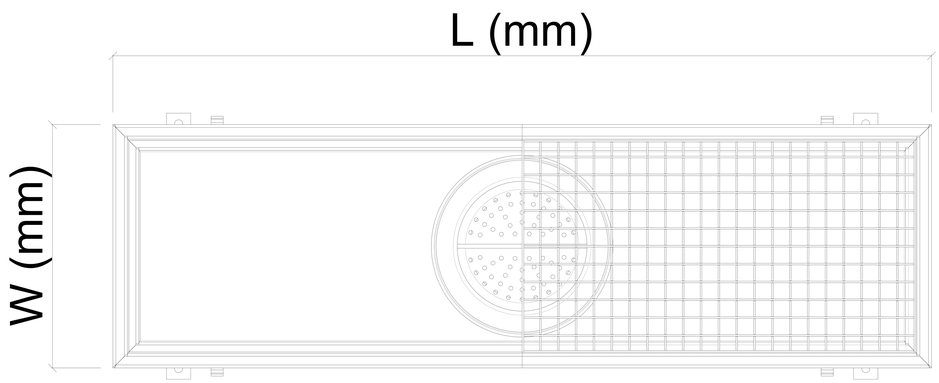

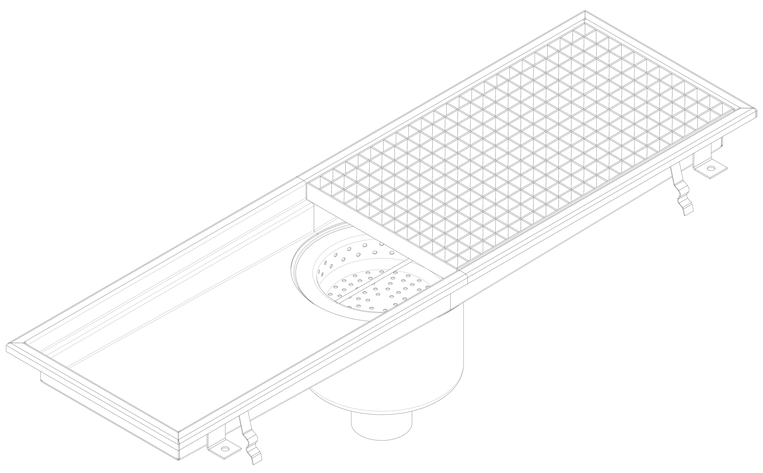

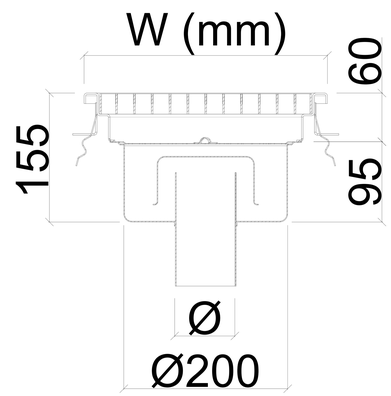

LOW TYPE					
MODEL	W x L	H1-H2	Ø		
			DN50	DN70	DN100
TOAG-310	300 x 1009	50-60	Ø50	Ø75	Ø110
TOAG-312	300 x 1271				
TOAG-314	300 x 1496				
TOAG-317	300 x 1757				
TOAG-319	300 x 1981				
TOAG-323	300 x 2244				
TOAG-324	300 x 2468				
Max. Flow Rate lt / min			50	50	70
Waterseal Height			50mm		

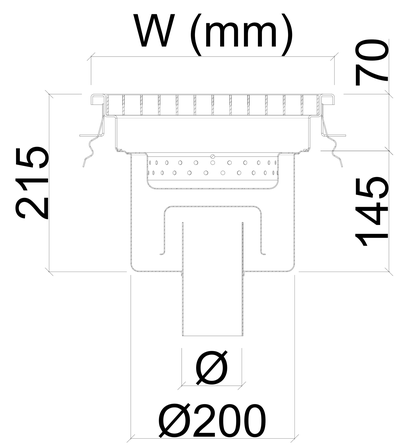

DEEP TYPE					
MODEL	W x L	H1-H2	Ø		
			DN50	DN70	DN100
TOAG-310	300 x 1009	60-70	Ø50	Ø75	Ø110
TOAG-312	300 x 1271				
TOAG-314	300 x 1496				
TOAG-317	300 x 1757				
TOAG-319	300 x 1981				
TOAG-323	300 x 2244				
TOAG-324	300 x 2468				
Max. Flow Rate lt / min			50	50	70
Waterseal Height			60mm		

APPLICATION DRAWING

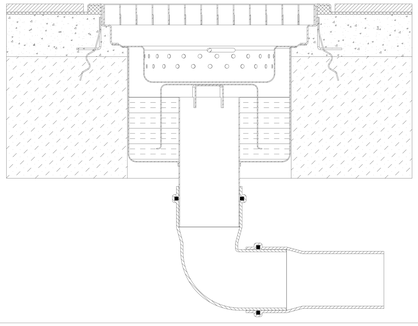

OPTIONAL

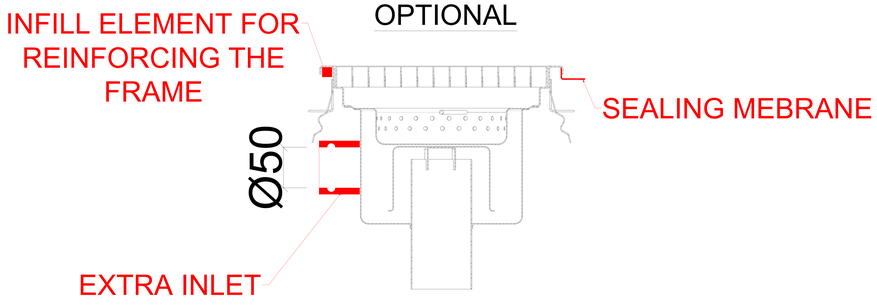

FENICROM®