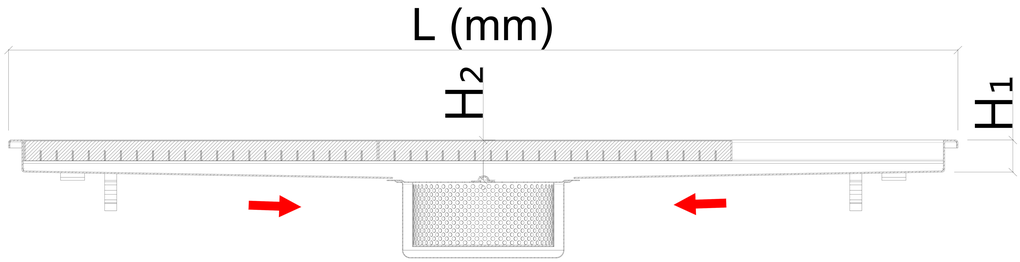

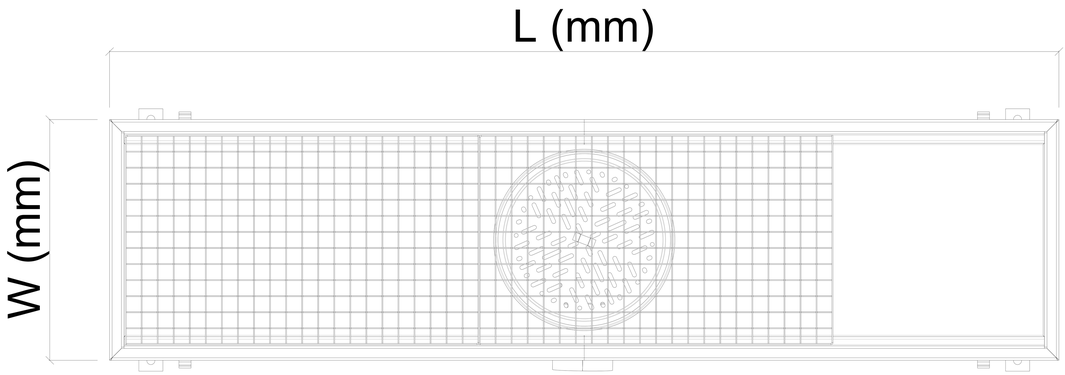

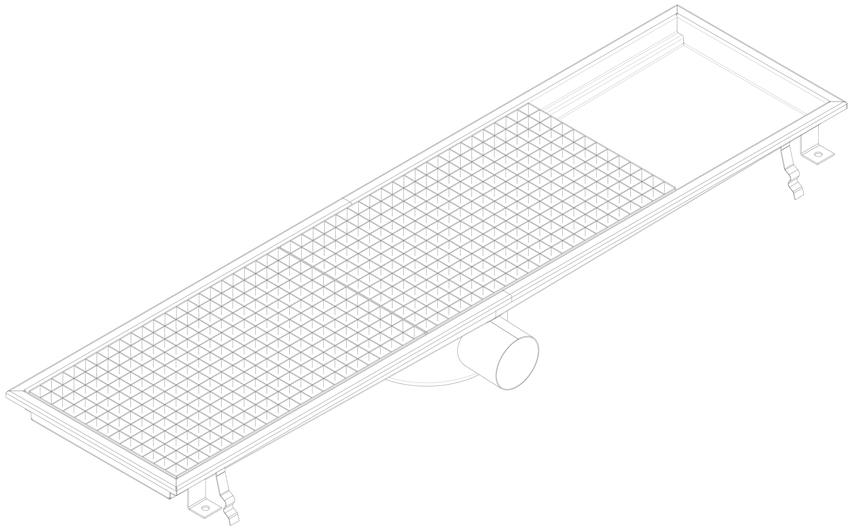

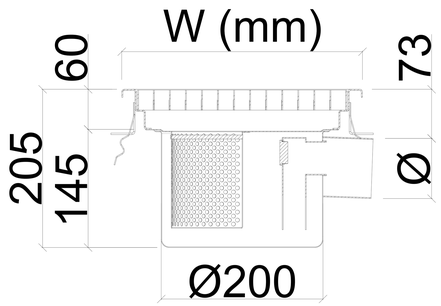

LOW TYPE

MODEL	W x L	H_1-H_2	Ø DN50	Ø DN70
OYG-39	300 x 921	40-50	Ø50	Ø75
OYG-311	300 x 1183			
OYG-313	300 x 1364			
OYG-316	300 x 1625			
OYG-318	300 x 1805			
OYG-320	300 x 2068			
OYG-322	300 x 2248			
OYG-325	300 x 2510			
Max. Flow Rate lt / min			50	50
Waterseal Height			50mm	

DEEP TYPE

MODEL	W x L	H_1-H_2	Ø DN50	Ø DN70	Ø DN100
OYG-39-D	300 x 921	50-60	Ø50	Ø75	Ø110
OYG-311-D	300 x 1183				
OYG-313-D	300 x 1364				
OYG-316-D	300 x 1625				
OYG-318-D	300 x 1805				
OYG-320-D	300 x 2068				
OYG-322-D	300 x 2248				
OYG-325-D	300 x 2510				
Max. Flow Rate lt / min			50	50	70
Waterseal Height			60mm		

APPLICATION DRAWING

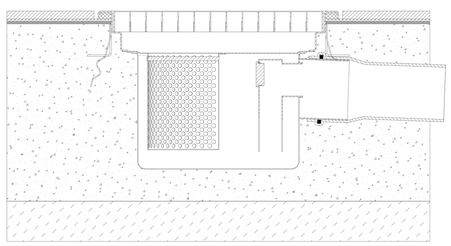

OPTIONAL

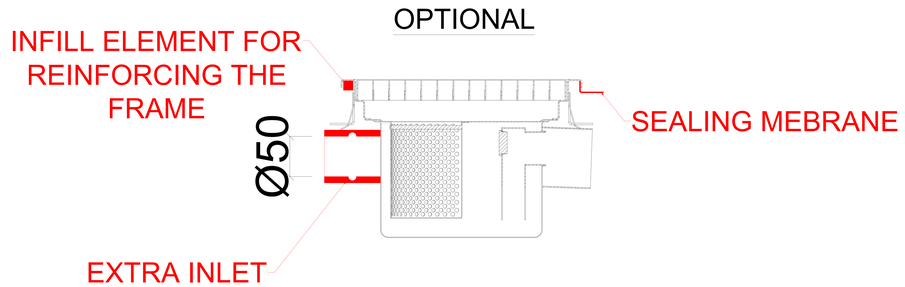

FENICROM®